Slavomír Sůva

Graphical analysis of first and second order pulse-width-modulated sampled-data regulator systems

Kybernetika, Vol. 7 (1971), No. 1, (58)--76

Persistent URL: http://dml.cz/dmlcz/124748

KYBERNETIKA — VOLUME 7 (1971), NUMBER 1

Graphical Analysis of First and Second Order Pulse-Width-Modulated Sampled-Data Regulator Systems

SLAVOMÍR SŮVA

This article presents a simple graphical technique for Pulse-Width-Modulated (PWM) Sampled-Data systems with first and second order linear plants using sequence-space approach. The open- and closed-loop is analysed.

1. INTRODUCTION

To carry out the analysis of Pulse-Width-Modulated Sampled-Data (PWMSD) systems means to solve nonlinear difference equations. Among many authors E. Polak described a very simple graphical method [1]. The technique described in this paper extends this method so that we may obtain more precise results. Thus not only in the sampling time [1], but also in the pulse-end the state-variables values are estimated. This technique enables us to compute the open- and closed-loop step response. In all the cases two types of pulse-width modulators are applied:

a) The modulator of Type I.

Its output is described by the following modulation law:

$$u(t) = \begin{cases} U \operatorname{sgn} e(kT_s)\,, \\ 0\,, \end{cases} \tag{1}$$

$$\left|\frac{\Delta t_k}{T_s}\right| = |e(kT_s)|\,.$$

b) The modulator of Type III.

Its output is described by the following modulation law:

$$u(t) = \begin{cases} U\,, \\ 0\,, \end{cases} \tag{2}$$

$$\left|\frac{\Delta t_k}{T_s}\right| = |e(kT_s)|\,.$$

where

U = the modulator pulse height ,

T = the sampling period ,

Δt_k = the pulse width for the k-th sampling period ,

$e(kT_s)$ = the error in the time $t = kT_s$.

The behaviour of the PWMSD system is described by nonlinear difference equations [2, 3]. Solving these equations one obtains the relations for two different states of the system:

1. in the time $kT_s \leqq t \leqq kT_s + \Delta t_k$,
2. in the time $kT_s + \Delta t_k \leqq t \leqq \overline{k+1}T_s$

The sequence-space approach consists in defining the column matrix

$$X_i = \begin{bmatrix} x_j(kT_s) \\ x_j(kT_s + \Delta t_k) \\ x_j(\overline{k+1}T_s) \\ \vdots \\ x_n(kT_s) \\ x_n(kT_s + \Delta t_k) \\ x_n(\overline{k+1}T_s) \\ \vdots \\ x_r(kT_s) \\ x_r(kT_s + \Delta t_k) \\ x_r(\overline{k+1}T_s) \end{bmatrix} \tag{3}$$

as the state-vector of the system.

The geometric interpretation of this definition is the base for the graphical analysis and computation of the PWMSD systems.

2. OPEN-LOOP STEP RESPONSE OF THE FIRST ORDER LINEAR PLANT

The block diagram of system is given on Fig. 1. In this case the state-vector has

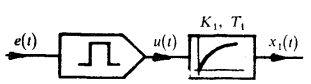

Fig. 1.

three dimensions, i.e.

$$X_1 = \begin{bmatrix} x_1(kT_s) \\ x_1(kT_s + \Delta t_k) \\ x_1(k+1T_s) \end{bmatrix} . \tag{4}$$

2.1. The plant with one time constant

The plant is described by the transfer function

$$F(p) = \frac{x_1(p)}{u_1(p)} = \frac{K_1}{1 + pT_1} \tag{5}$$

where

K_1 = the plant gain ,

T_1 = the plant time constant .

The symbols

$$\tau_1 = \frac{T_s}{T_1}, \quad \tau_k = \frac{\Delta t_k}{T_s} \tag{6}$$

are used in the following analysis.

Applying the results from other papers [1, 3, 4] for modulator of the type III, the derivation of basic equations is omitted. Let us define the set $\{\mathscr{P}_1\}$ as the set of all states of the system in time $t = kT_s + \Delta t_k$. Hence

$$\{\mathscr{P}_1\} = \{x_1(kT_s + \Delta t_k), \quad x_1(kT_s); \quad p_1 \equiv x_1(kT_s + \Delta t_k) = \\ = x_1(kT_s)\,\mathrm{e}^{-\tau_1\tau_k} + K_1U(1 - \mathrm{e}^{-\tau_1\tau_k})\}\,. \tag{7}$$

Similary in time $t = \overline{k+1}T_s$ for all states exists the set

$$\{\mathscr{P}_2\} = \{x_1(\overline{k+1}T_s), \quad x_1(kT_s + \Delta t_k); \quad p_2 \equiv x_1(\overline{k+1}T_s) = \\ = x_1(kT_s + \Delta t_k)\,\mathrm{e}^{-(1-\tau_k)\tau_1}\}\,. \tag{8}$$

These sets are represented in the plane $x_1(kT_s + \Delta t_k)$, $x_1(kT_s)$ by the line p_1 and in the plane $x_1(kT_s + \Delta t_k)$, $x_1(\overline{k+1}T_s)$ by the line p_2.

From the relation (4) one may recognize that the state-variables are the sequence of the discrete values of one variable. Therefore the three-dimensional space may be changed for the two-dimensional one, i.e. for the plane. First of all the steady-state of the system and the limit cycle amplitude are to be estimated.

In the steady-state the following equation hold:

$$x_1(kT_s) = x_1(\overline{k+1}T_s) = \ldots = x_1(NT_s) = x_1(\overline{N+1}T_s)\,, \tag{9}$$

$$x_1(kT_s + \Delta t_k) = x_1(\overline{k+1}T_s + \Delta t_{\overline{k+1}}) = \ldots = x_1(NT_s + \Delta t_N) = \\ = x_1(\overline{N+1}T_s + \Delta t_{N+1})\,. \tag{10}$$

By the union of $\{\mathscr{P}_1\}$ and $\{\mathscr{P}_2\}$ we obtain a new set

$$\{\mathscr{S}_1\} = \{\mathscr{P}_1\} \cup \{\mathscr{P}_2\} \tag{11}$$

with one element

$$x_1(NT_s + \Delta t_N) = \frac{1 - e^{-\tau_1 \tau_k}}{1 - e^{-\tau_1}} K_1 U \tag{12}$$

or a set

$$\{\mathscr{S}_2\} = \{\mathscr{P}_1\} \cup \{\mathscr{P}_2\} \tag{13}$$

with one element

$$x_1(\overline{N+1}T_s) = \frac{e^{-\tau_1}(e^{\tau_1 \tau_k} - 1)}{1 - e^{-\tau_1}} K_1 U \,. \tag{14}$$

Then the limit cycle amplitude

$$\xi_1 = \frac{x_1(\overline{N+1}T_s)}{x_1(NT_s + \Delta t_N)} = \frac{e^{-\tau_1}(e^{\tau_1 \tau_k} - 1)}{1 - e^{-\tau_1 \tau_k}} \tag{15}$$

s independent on the plant-gain and the pulse-height. Drawing in the plane the lines p_1 and p_2 (Fig. 2), the steday-state is geometrically represented by the inter-

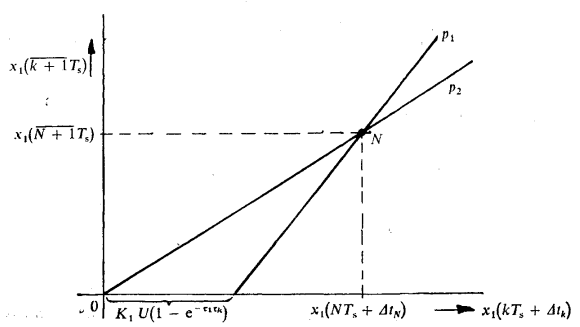

Fig. 2.

section-point N. Graphical computation of the open-loop step response is very simple and is drawn on Fig. 3. Let us assume the zero initial values. Therefore in time $t = \Delta t_1$

$$x_1(\Delta t_1) = K_1 U(1 - e^{-\tau_1 \tau_k}) \,.$$

This value is estimated by intersection of the line p_1 and the axis $x_1(kT_s + \Delta t_k)$.

Then in time $t = T_s$

$$x_1(T_s) = K_1 U(1 - e^{-\tau_1 \tau_k})\, e^{-\tau_1(1 - \tau_k)}$$

and according to the definition of the set $\{\mathscr{P}_2\}$ this value is represented as the point 1 on the line p_2. Applying analogy the following values are computed going on step by step.

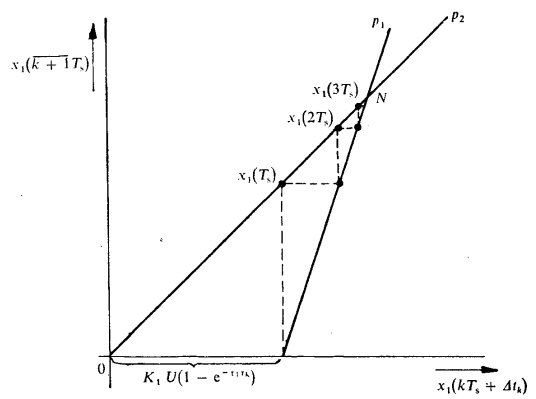

Fig. 3.

2.2. The plant with one integrator

The plant is described by the transfer function

$$F(p) = \frac{1}{pT_1}\,. \tag{16}$$

Let us consider the modulator of the type I. Ommiting again the derivation of the difference equations, the sets $\{\mathscr{P}_1\}$ and $\{\mathscr{P}_2\}$ for all states of system are defined. In time $t = kT_s + \Delta t_k$

$$\{\mathscr{P}_1\} = \{x_1(kT_s + \Delta t_k)\,,\quad x_k(kT_s)\,;\quad p_1 \equiv U\tau_1\tau_k \operatorname{sgn} e(kT_s) + x_1(kT_s) = \\ = x_1(kT_s + \Delta t)\,. \tag{17}$$

In time $t = \overline{k+1}T_s$

$$\{\mathscr{P}_2\} = \{x_1(\overline{k+1}T_s)\,,\quad x_1(kT_s + \Delta t_k)\,;\quad p_2 \equiv x_1(\overline{k+1}T_s) = \\ = x_1(kT_s + \Delta t_k)\,. \tag{18}$$

In the plane are these sets represented by the lines p_1 and p_2 (Fig. 4). Graphical computation of the open loop step response is carried out in the same way as in the paragraph 2.1.

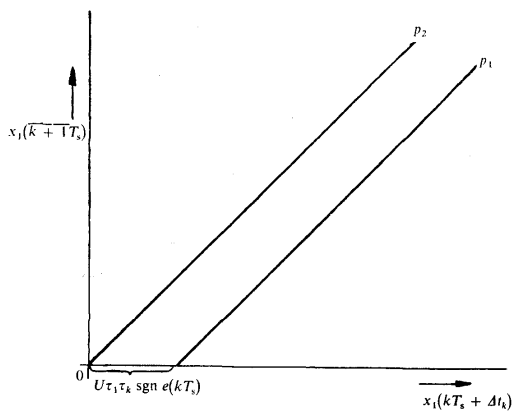

Fig. 4.

3. Open-loop step response of the second order linear plant

Inspecting the block-diagram on Fig. 5 one observes the term with transfer-function

$$F_1(p) = \frac{K_1}{1 + pT_1} \tag{19}$$

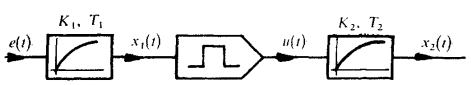

Fig. 5.

in the modulator input. The modulator of the type III is used. Thus the following equations were derived, when $e(kT_s) = e_0 = \text{const.}$:

$$x_1(kT_s + \Delta t_k) = e_0 K_1(1 - e^{-\tau_1\tau_k}) + x_1(kT_s)\, e^{-\tau_1\tau_k}, \tag{20}$$

$$x_1(\overline{k+1}T_s) = e_0 K_1(1 - e^{-(1-\tau_1)\tau_1}) + x_1(kT_s + \Delta t_k)\, e^{-(1-\tau_k)\tau_1}, \tag{21}$$

$$x_2(kT_s + \Delta t_k) = K_2\left[1 - \frac{1}{T_1 - T_2}(T_1 e^{-\tau_1 \tau_k} - T_2 e^{-\tau_2 \tau_k})\right] e_0 + \tag{22}$$

$$+ \frac{K_2}{K_1}\frac{1}{T_1 - T_2}(T_1 e^{-\tau_1 \tau_k} - T_2 e^{-\tau_2 \tau_k})\, x_1(kT_s) + x_2(kT_s)\, e^{-\tau_2 \tau_k},$$

$$x_2(\overline{k+1}T_s) = e^{-(1-\tau_k)\tau_2}\, x_2(kT_s + \Delta t_k) \tag{23}$$

with these relations

$$x_1(NT_s) = K_1 e_0\,, \tag{24}$$

$$\tau_k = \frac{x_1(NT_s)}{K_1} \leqq 1\,, \tag{25}$$

where $x_1(NT_s)$ = the steady-state value of the variable $x_1(t)$ in the time $t = NT_s$.

From these equations follows the existence of the five-dimensional space. Dividing it in two subspaces this problem may be solved then in two- or three-dimensional subspace. Therefore two state vectors are chosen:

$$X_1 = \begin{bmatrix} x_1(kT_s) \\ x_1(kT_s + \Delta t_k) \\ x_1(\overline{k+1}T_s) \end{bmatrix}, \quad X_2 = \begin{bmatrix} x_1(kT_s) \\ x_2(kT_s) \\ x_2(kT_s + \Delta t_k) \\ x_2(\overline{k+1}T_s) \end{bmatrix}. \tag{26}$$

Thus two sequence spaces exist.

The state-variables of the state-vector X_1 are only the discrete values of the output signal from the term with transfer function (19). Thus the first step of the graphical computation is the same as that in the paragraph 2.1. The result is the sequence of the discrete values determining the pulse-width Δt_k, τ_k respectively.

Applying the equations (22) and (23), let us define the sets

$$\{\mathscr{M}_1\} = \{x_2(kT_s + \Delta t_k), x_2(kT_s), x_1(kT_s);\, m_1 \equiv x_2(kT_s + \Delta t_k) = \tag{27}$$

$$= a + b\, x_1(kT_s) + c\, x_2(kT_s)\}\,,$$

$$\{\mathscr{M}_2\} = \{x_2(\overline{k+1}T_s), x_2(kT_s + \Delta t_k);\, m_2 \equiv x_2(\overline{k+1}T_s) = d\, x_2(kT_s + \Delta t_k)\,. \tag{28}$$

The set of all states is represented by the plane m_1 and by the line m_2. The steady state of the system is a new set

$$\{\mathscr{S}_1\} = \{\mathscr{M}_1\} \cup \{\mathscr{M}_2\} \tag{29}$$

and is represented by the point in the plane m_1 and by the point on the line m_2.

Figure 6 presents the graphical computation of the open-loop step response assuming that the response of the term with transfer-function (19) is known.

All states for $t = kT_s + \Delta t_k$ are in the plane m_1 and for $t = \overline{k+1}T_s$ on the line. In the first sampling period we know $x_2(\Delta t_1) = a$. On the line m_2 lies a point A_1

with the coordinates $x_2(T_s)$ and a. In the time $t = T_s + \Delta t_2$ the state of the system must be represented by the point in the plane m_1. Drawing a line l_1 parallel with the axis $x_2(kT_s + \Delta t_k)$ we can find the intersection-point B_1 and thus also the value $x_2(T_s + \Delta t_2)$. In the same way we are going on to obtain the points A_2, B_2 etc.

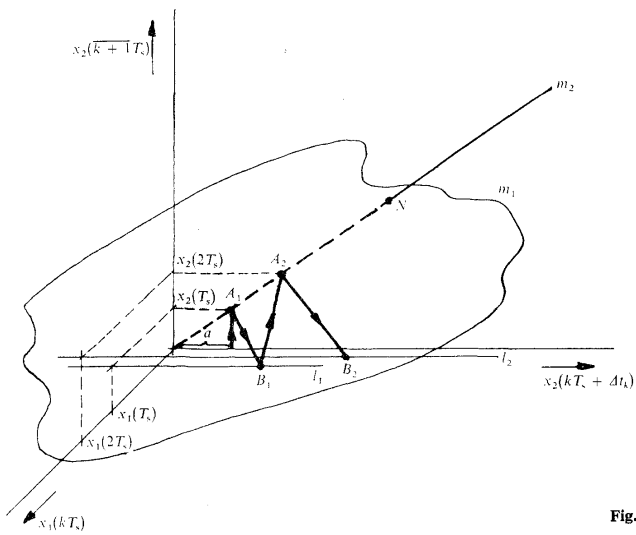

Fig. 6.

Hence the graphical computation is reduced to the basic problem of description geometry, i.e. to find the intersection-point of a line with a plane.

4. CLOSED-LOOP STEP RESPONSE OF THE FIRST ORDER LINEAR PLANT

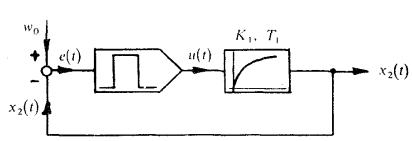

Fig. 7.

The block-diagram of the system is given in Fig. 7.

The behaviour of this system is described by two following nonlinear difference equations:

$$x_1(kT_s + \Delta t_k) = x_1(kT_s)\,e^{-\tau_1[w_0 - x_1(kT_s)[} + K_1 U\{1 - e^{-\tau_1[w_0 - x_1(kT_s)]}\}\,, \tag{30}$$

$$x_1(\overline{k+1}T_s) = x_1(kT_s + \Delta t_k)\,e^{-\{-1[w_0 - x_1(kT_s)]\}\tau_1}\,. \tag{31}$$

The modulator of the type III is used.

The pulse-width in the closed-loop

$$\tau_k = w_0 - x_1(kT_s)\,. \tag{32}$$

Hence the three state-variables exist, i.e. $x_1(\overline{k+1}T_s)$, $x_1(kT_s)$ respectively, $x_1(kT_s + \Delta t_k)$, $w_0 - x_1(kT_s)$, forming three-dimensional sequence-space.

Let us define again the sets of all states

$$\{\mathscr{R}_1\} = \{x_1(kT_s + \Delta t_k), x_1(kT_s), [w_0 - x_1(kT_s)]; m_1 \equiv x_1(kT_s + \Delta t_k) = \\ = x_1(kT_s)\,e^{-\tau_1[w_0 - x_1(kT_s]} + K_1 U\{1 - e^{-\tau_1[w_0 - x_1(kT_s)]}\}\,, \tag{33}$$

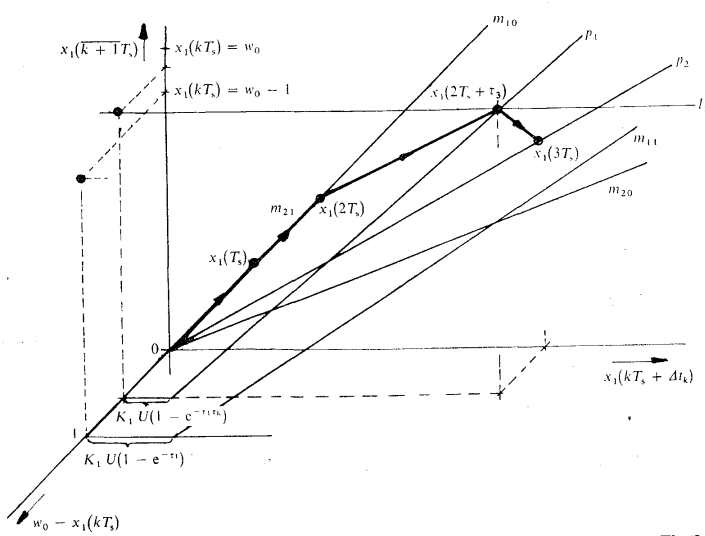

Fig. 8.

(34) $\{\mathscr{R}_2\} = \{x_1(\overline{k+1}T_s), x_1(kT_s + \Delta t_k); [w_0 - x_1(kT_s)]; m_2 \equiv x_1(\overline{k+1}T_s) =$

$$= x_1(kT_s + \Delta t_k)\, e^{-\{1-[w_0 - x_1(kT_s)]\}\tau_1}$$

which are represented as the planes m_1 and m_2.

There are two limit states of the modulator:

$$\tau_k \leqq 0 \quad \text{and} \quad \tau_k \geqq 1\,.$$

In this case the sets $\{\mathscr{R}_1\}$ and $\{\mathscr{R}_2\}$ are then changed in the lines m_{10}, m_{11}, m_{20}, m_{21} laying in two parallel planes (Fig. 8). The distance between these planes equals 1.

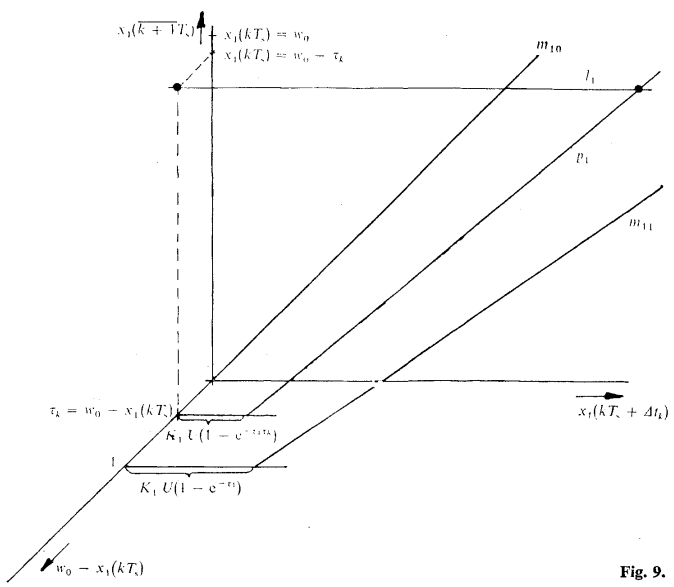

Fig. 9.

Let us now consider for the graphical representation (Fig. 8) that in the first sampling period

$$x_1(T_s) < (w_0 - 1)$$

also $\tau_k > 1$.

In the second sampling period

$$(w_0 - 1) \leqq x_1(2T_s) \leqq w_0\,.$$

Therefore $\tau_3 < 1$ and in the time $t_3 = 2T_s + \Delta t_3$ the state of the system is mapped by a point on the line

$$p_1 \equiv x_1(2T_s + \Delta t_3) = x_1(2T_s)\,e^{-\tau_1\tau_3} + K_1U(1 - e^{-\tau_3})^{\tau_1}$$

laying in the plane m_1.

The following discrete state must lie in the plane m_2. The mapping point is on the line

$$p_2 \equiv x_1(3T_s) = x_1(2T_s + \Delta t_3)\,e^{-(1-\tau_1)\tau_3}\,.$$

To analyse this first order system means to determine some state from the set $\{\mathscr{R}_1\}$. This procedure is given on Fig. 9. The mapping point for some τ_k must be on the line p_1 and is determined as the intersection point with the line l_1. It is easy to solve this problem using the front view projection of the lines p_1, m_{10}, m_{11}, m_{20}, m_{21}.

4.2. The plant with one integrator

Applying the results of the paragraph 2.2 we define the sets of all states

$$(35)\quad \{\mathscr{P}_1\} = \{x_1(kT_s + \Delta t_k), [w_0 - x_1(kT_s)], x_1(kT_s);\ m_1 \equiv x_1(kT_s + \Delta t_k) = \\ = x_1(kT_s) + U\tau_1|[w_0 - x_1(kT_s)]|\ \mathrm{sgn}\,[w_0 - x_1(kT_s)]\}\,,$$

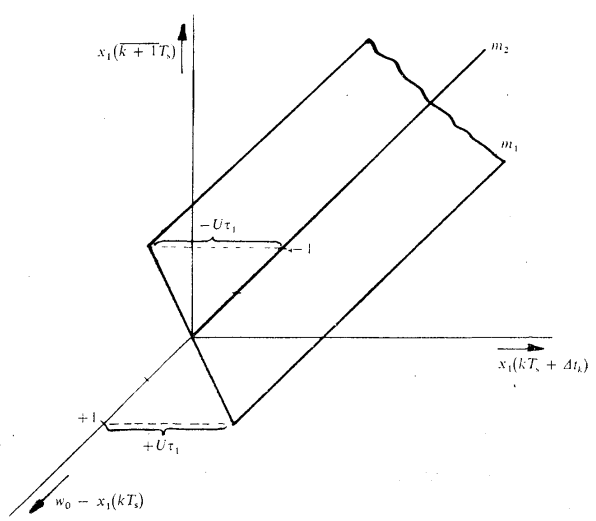

Fig. 10.

$$(36)\qquad \{\mathscr{P}\} = \{x_1(\overline{k+1}T_s),\, x_1(kT_s + \Delta t_k);\; x_1(\overline{k+1}T_s) = x_1(kT_s + \Delta t_k)\}\,.$$

The set $\{\mathscr{P}_1\}$ is geometrically represented as the plane going through the origin and the set $\{\mathscr{P}_2\}$ as the line (Fig. 10). For $|\tau_k| = |[w_0 - x_1(kT_s)]| < 1$ some state must be mapped as a point on the line between two lines described by equation

$$(37)\qquad x_1(kT_s + \Delta t_k) = \pm\tau_1 U + x_1(kT_s)\,.$$

5. CLOSED LOOP STEP RESPONSE OF THE SECOND ORDER LINEAR PLANT

The plant consists of two terms (Fig. 11) with the transfer-functions

$$(38)\qquad F_1(p) = \frac{K_1}{1 + pT_1}\,,$$

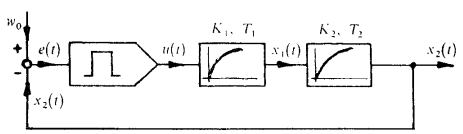

Fig. 11.

$$(39)\qquad F_2(p) = \frac{K_2}{1 + pT_2}\,.$$

The modulator of type III is applied. The behaviour of the system is described by the following nonlinear difference equations

$$(40)\qquad x_1(kT_s + \Delta t_k) = K_1\{1 - e^{-[w_0 - x_2(kT_s)]\tau_1}\}\, U + e^{-\tau_1[w_0 - x_2(kT_s)]} x_1(kT_s)\,,$$

$$(41)\qquad x_1(\overline{k+1}T_s) = e^{-\{1-[w_0 - x_2(kT_s)]\}\tau_1} x_1(kT_s + \Delta t_k)\,,$$

$$(42)\qquad x_2(kT_s + \Delta t_k) = \left\{\frac{1}{T_2 - T_1}\left[T_1 e^{-[w_0 - x_2(kT_s)]\tau_1} - T_2 e^{-[w_0 - x_2(kT_s)]\tau_2}\right] + 1\right\}.$$
$$.\, K_1 K_2 U + x_2(kT_s)\, e^{-[w_0 - x_2(kT_s)]\tau_2} +$$
$$+ K_2 \frac{T_2}{T_1 - T_2}\{e^{-[w_0 - x_2(kT_s)]\tau_1} - e^{-[w_0 - x_2(kT_s)]\tau_2}\}\, x_1(kT_s)\,,$$

$$(43)\qquad x_2(\overline{k+1}T_s) =$$
$$= K_2 \frac{T_1}{T_1 - T_2}\{e^{-\{1-[w_0 - x_2(kT_s)]\}\tau_1} - e^{-\{1-[w_0 - x_2(kT_s)]\}\tau_2}\}\, x_1(kT_s + \Delta t_k) +$$
$$+ x_2(kT_s + \Delta t_k)\, e^{-\{1-[w_0 - x_2(kT_s)]\}\tau_2}\,.$$

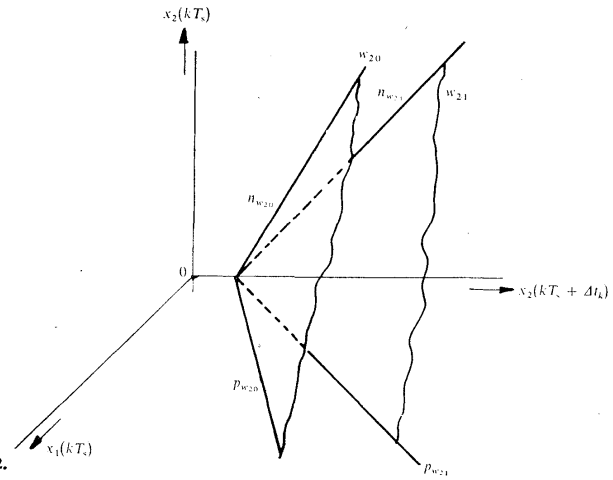
$x_2(kT_s)$
w_{20}
$n_{w_{21}}$
w_{21}
$n_{w_{20}}$
0
$x_2(kT_s + \Delta t_k)$
$p_{w_{20}}$
$x_1(kT_s)$
$p_{w_{21}}$

Fig. 12.

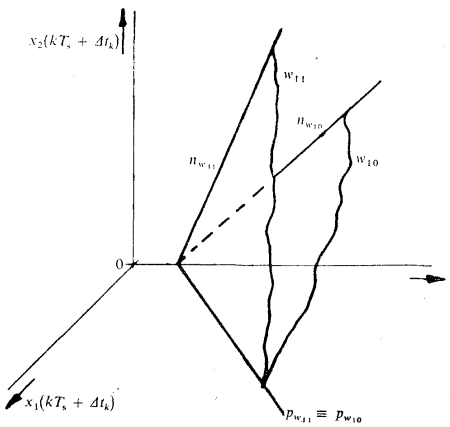
$x_2(kT_s + \Delta t_k)$
w_{11}
$n_{w_{10}}$
w_{10}
$n_{w_{11}}$
0
$x_1(kT_s + \Delta t_k)$
$p_{w_{11}} \equiv p_{w_{10}}$

Fig. 13.

The inspection of these equations yields that the multidimensional sequence – space exists. The sets of all states are represented as the hyperplanes. To simplify this problem we consider that $[w_0 - x_1(kT_s)]$ is a parameter. Then we obtain the sequence of all discrete values of $x_1(kT_s)$ using the way described in the paragraph 4.1.

For $x_2(t)$ we define the sets of all states

$$\{\mathscr{W}_1\} = \{x_2(kT_s + \Delta t_k), x_1(kT_s), x_2(kT_s); w_1 \equiv x_2(kT_s + \Delta t_k) = \\ = a\, x_2(kT_s) + b\, x_1(kT_s) + c\}\,, \tag{44}$$

$$\{\mathscr{W}_2\} = \{x_2(\overline{k+1}T_s), x_1(kT_s + \Delta t_k), x_2(kT_s + \Delta t_k); w_2 \equiv x_2(\overline{k+1}T_s) = \\ = h\, x_2(kT_s + \Delta t_k) + g\, x_1(kT_s + \Delta t_k)\,. \tag{45}$$

The values of the factors a, b, c, g, h flow from the comparison of the equations (42), (43) with (44), (45).

The sets $\{\mathscr{W}_1\}$ and $\{\mathscr{W}_2\}$ are the unions of planes represented in the three-dimensional space by its top view p_w and front view n_w traces (Fig. 12, 13). The index 0 is valid for $\tau_k \leqq 0$, the index 1 is valid for $\tau_k \geqq 1$.

Applying the rules of description geometry one may obtain the sequence of all the discrete states. It is the same method as used in the paragraph 3. Its application is quite easy.

6. CONCLUSION

In this article we have introduced the simple graphical method for the analysis of the PWMSD systems based on the sequence space approach. It can not be a competition for the digital computer. However, it may be applied for the fast consideration about a convenient modulator, sampling period duration, etc.

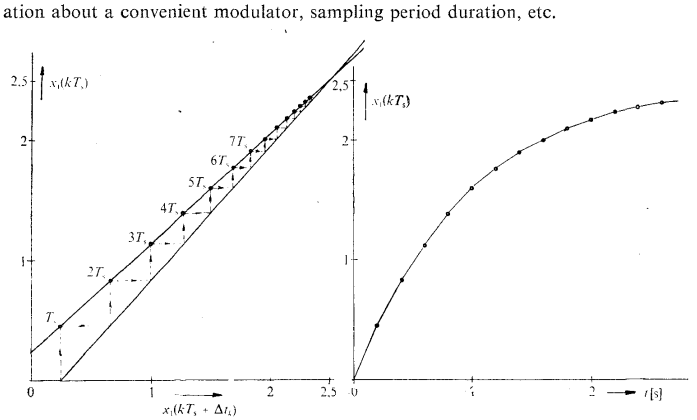

Fig. 14.

For the illustration of the above described method two examples are solved.

7.1. Open-loop step response of the second order linear plant

Let us consider the block diagram of the system on Fig. 5 with following values:

$$K_1 = 5\,; \quad K_2 = 5\,; \quad T_1 = 1\ \mathrm{s}\,; \quad T_2 = 2\ \mathrm{s}\,; \quad T = 0{\cdot}2\ \mathrm{s}\,; \quad e(t) = e_0 = 0{\cdot}5\,.$$

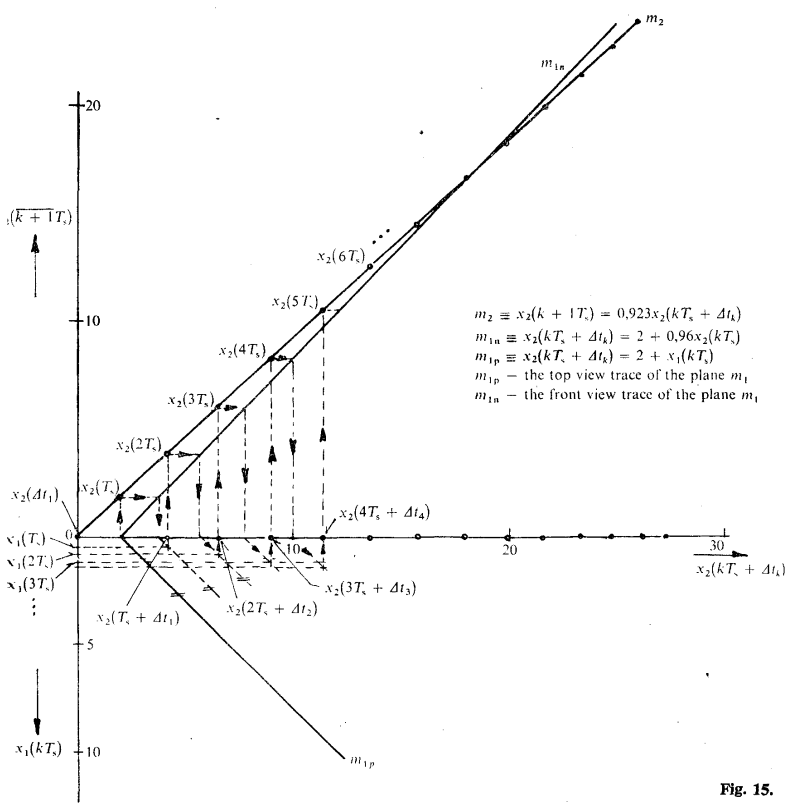

Fig. 15.

Respecting the relations (6), (24), (25) and the equations (20), (21), (22), (23), (27), (28), after several steps we compute

$$\tau_1 = 0{\cdot}2\ ;\quad \tau_2 = 0{\cdot}1\ ;\quad \tau_k = 0{\cdot}5$$

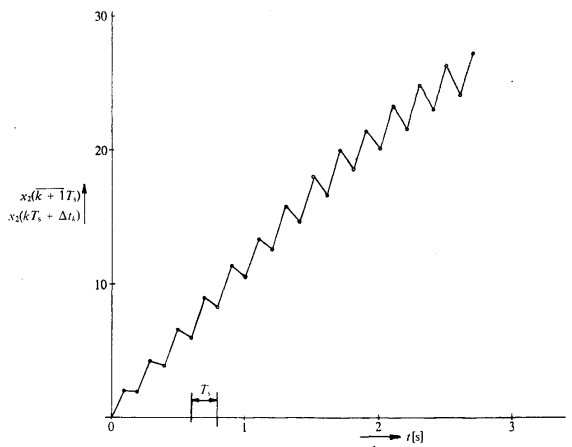

Fig. 16.

On Fig. 14 the first step of the graphical computation is drawn, i.e. the discrete values of $x_1(kT_s)$ are estimated. On Fig. 15 is the graphical computation of $x_2(kT_s + \Delta t_k)$, $x_2(\overline{k+1}T_s)$ respectively. The time-sequence of these discrete values is drawn on Fig. 16.

7.2. Closed-loop step response of the first order linear plant

The first order system is represented by the block diagram on Fig. 7 with $T_s = 1$ s, $T_1 = 5$ s, $K_1 = 100$, $w_0 = 75$, $U = 1$. Thus $\tau_1 = 0{\cdot}2$ and the behaviour of the system is described by following difference equations:

$$x_1(kT_s + \Delta t_k) = x_1(kT_s)\,e^{-0.2[75 - x_1(kT_s)]} + 100\{1 - e^{-0.2[75 - x_1(kT_s)]}\}\,,$$

$$x_1(\overline{k+1}T_s) = x_1(kT_s + \Delta t_k)\,e^{-\{1 - [75 - x_1(kT_s)]\}0.2}\,.$$

The modulator of type III is applied.

For the first limit state, when $[w_0 - x_1(kT_s)] \leqq 0$ exist the lines

$$m_{10} \equiv x_1(kT_s + \Delta t_k) = x_1(kT_s)\,,$$

$$m_{20} \equiv x_1(\overline{k+1}T_s) = 0{\cdot}819x_1(kT_s + \Delta t_k)\,,$$

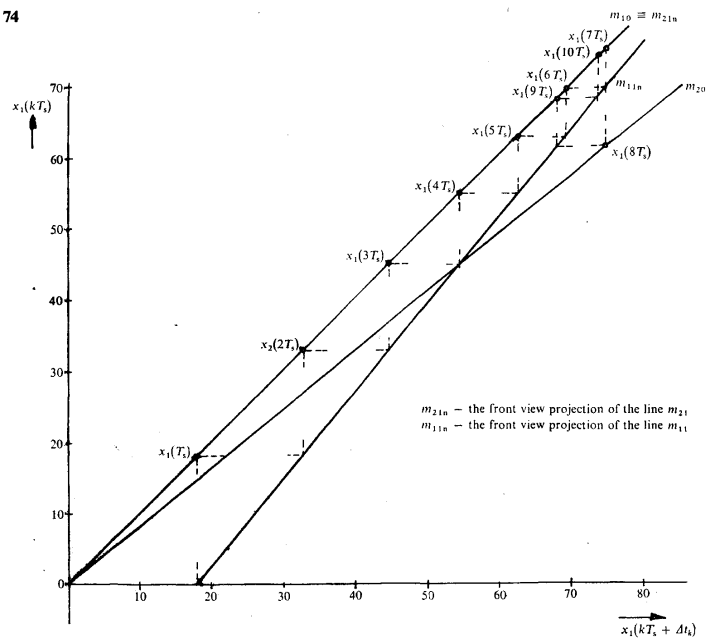

Fig. 17.

and for the second one when $[w_0 - x_1(kT_s)] \geqq 1$ exist the lines

$$m_{11} \equiv x_1(kT_s + \Delta t_k) = 0{\cdot}819 x_1(kT_s) + 18{\cdot}1\,,$$
$$m_{21} \equiv x_1(\overline{k+1}T_s) = x_1(kT_s + \Delta t_k)\,.$$

The lines m_{10}, m_{20} and the front view projections of the lines m_{11}, m_{21} are drawn on Fig. 17 and in other scale in the neighbourhood of the desired value $x_1(kT_s) = w_0 = 75$ on Fig. 18. One may compute that in the seventh sampling period $x_1(7T_s) = 75{\cdot}3$. Hence during the following sampling period the output of the modulator is zero. Thus till in time $t = 10T_s$ $x_1(10T_s) = 74{\cdot}6$ and $\tau_{11} = 0{\cdot}4$. Drawing the front view projections of the lines

$$p_1 \equiv x_1(10T_s + \Delta t_{11}) = x_1(10T_s)\,\mathrm{e}^{-\tau_1\tau_{11}} + 100\{1 - \mathrm{e}^{-\tau_1\tau_{11}}\}\,,$$
$$p_2 \equiv x_1(11T_s) = x_1(10T_s + \Delta t_{11})\,\mathrm{e}^{-\tau_1(1-\tau_{11})}$$

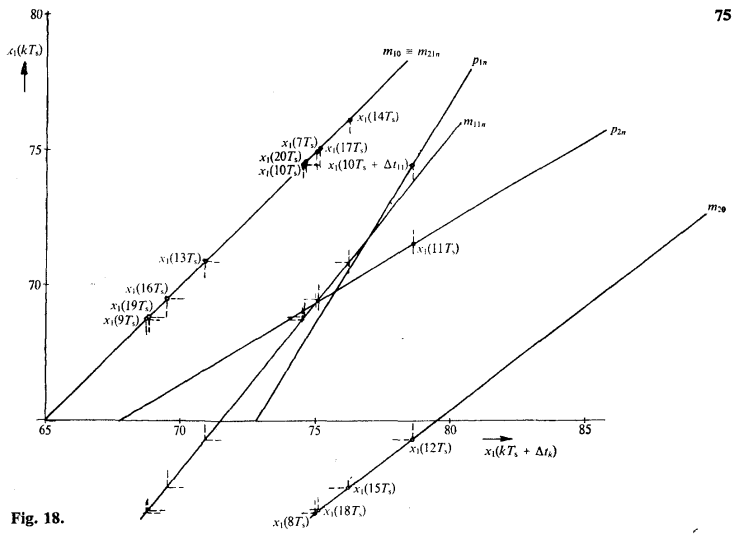
80
75
70
65
70
75
80
85
$x_1(kT_s)$
$x_1(kT_s + \Delta t_k)$
$m_{10} \equiv m_{21n}$
p_{1n}
m_{11n}
p_{2n}
m_{20}
$x_1(14T_s)$
$x_1(7T_s)$
$x_1(20T_s)$
$x_1(10T_s)$
$x_1(17T_s)$
$x_1(10T_s + \Delta t_{11})$
$x_1(13T_s)$
$x_1(11T_s)$
$x_1(16T_s)$
$x_1(19T_s)$
$x_1(9T_s)$
$x_1(12T_s)$
$x_1(15T_s)$
$x_1(18T_s)$
$x_1(8T_s)$

Fig. 18.

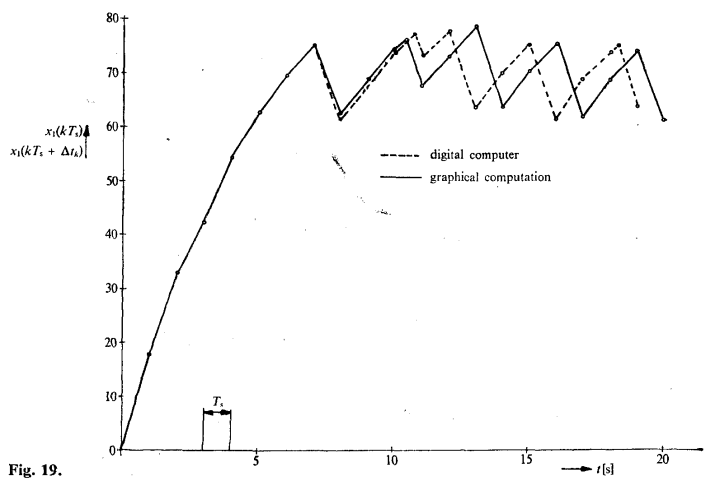
80
70
60
50
40
30
20
10
0
5
10
15
20
$x_1(kT_s)$
$x_1(kT_s + \Delta t_k)$
digital computer
graphical computation
T_s
t[s]

Fig. 19.

we estimate in the same manner $x_1(10T_s + \Delta t_{11})$, $x_1(11T_s)$ respectively. Going step by step we compute the step response which is drawn on Fig. 19. For the comparison, on the same figure the step response computed on digital computer is drawn.

(Received June 29, 1970.)

REFERENCES

[1] E. Polak: Stability and Graphical Analysis of First-Order Pulse-Width-Modulated Sampled-Data Regulator Systems. IRE Transactions on Automatic Control *AC-5* (1961), 276—282.
[2] J. T. Tou: Modern Control Theory. Mc Graw-Hill, New York 1964.
[3] S. Sůva: Analysis of Pulse-Width-Modulated Sampled-Data Systems. (In Czech) Automatizace *10* (1967), 6, 146—150.
[4] S. Sůva, S. Navrátil, O. Hora: Analysis of Control Systems Containing Electrical Machines and Continuous or Discontinuous Controller by Means of a Digital Computer (in German) Messen-Steuern-Regeln *11* (1968), 9, 338—341.
[5] T. M. De Russo, R. J. Roy, Ch. M. Close: State Variables for Engineers. Mc Graw-Hill, New York 1965.

VÝTAH

Grafická analýza šířkově modulovaných regulačních soustav prvního a druhého řádu

SLAVOMÍR SŮVA

V článku je ukázána jednoduchá grafická metoda pro analýzu impulsových systémů se šířkovou modulací. Užívá se metody prostoru posloupností se soustavami prvního a druhého řádu, jež jsou popsány lineární diferenciální rovnicí. Je analýzována jak uzavřená tak i otevřená smyčka.

Ing. Slavomír Sůva, CSc., Výzkumný ústav silnoproudé elektrotechniky (Research Institute of Electrical Engineering), Běchovice u Prahy.